MC-10

Installation instructions

Installation, commissioning, maintenance and use of the appliance

Indirect air heater equipped with an energy efficient fan with DC motor

Dimensions

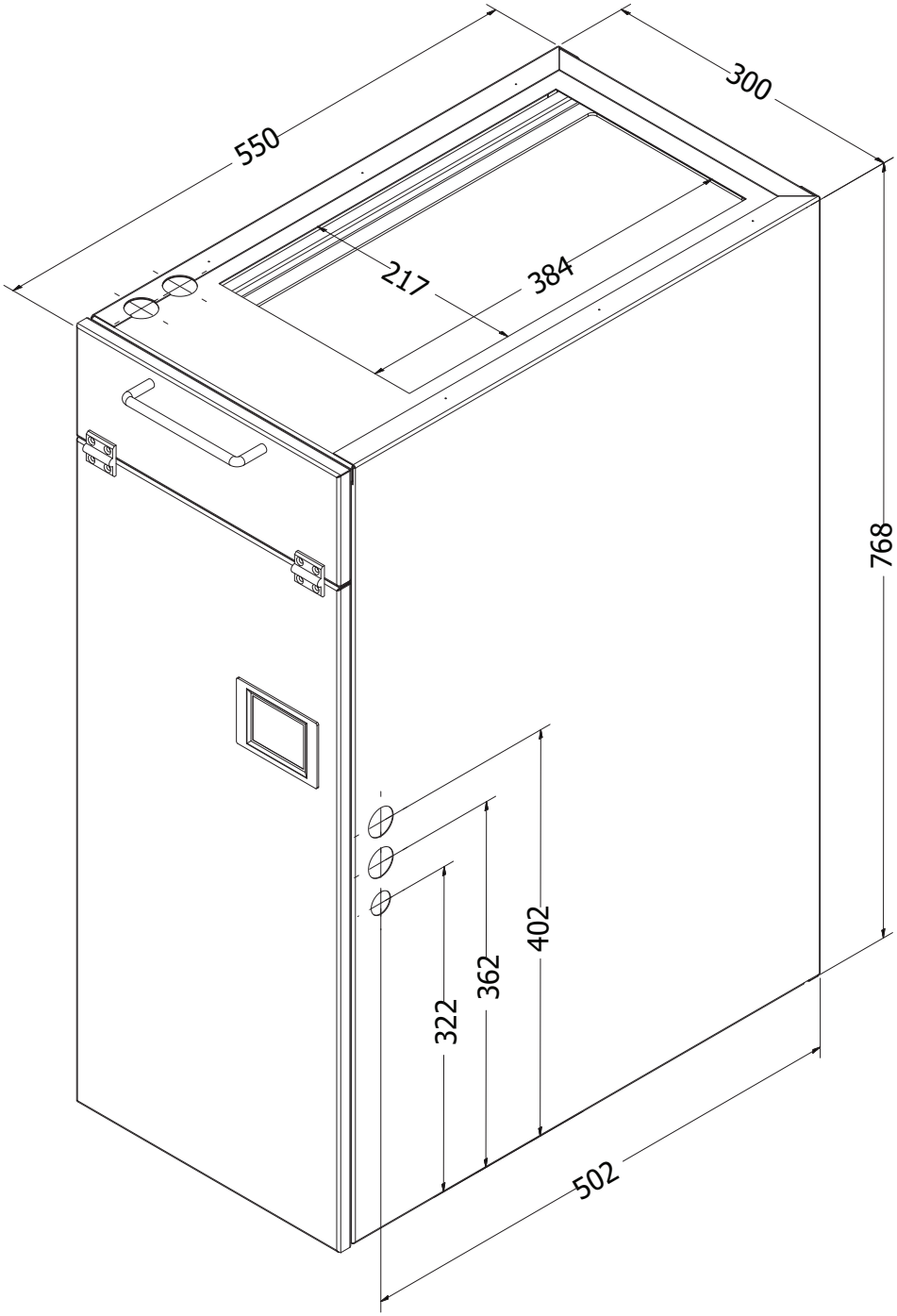

Exploided view

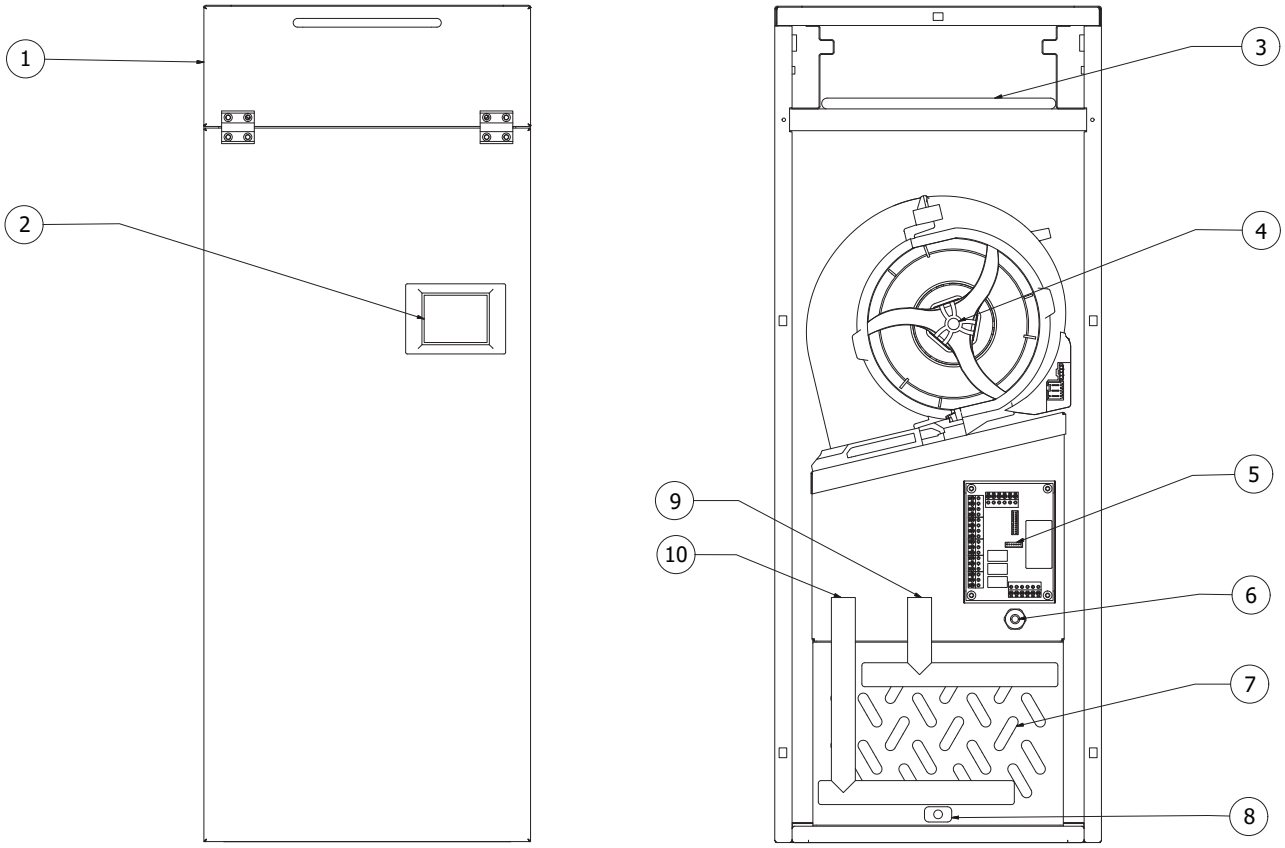

Legenda

Number	Description
1	Filter cover
2	TFT touch screen panel
3	Filter
4	D3G160 system blower
5	PCB
6	Temperature sensor : return air
7	Heat exchanger
8	Temperature sensor : supply air
9	Hot water return to heat source
10	Hot water flow from heat source

1 General information

The Multicalor MC-10 air handling units are indirectly fired air heaters. The units are equipped with generously sized heat exchangers with 6 rows. This ensures that even at low water temperatures sufficient high air temperatures are achieved. The units are therefore extremely suitable to be used with modern condensing boilers with reduced water temperature. Of course you can also use them for district heating.

This appliance excels by its timeless sleek design and a neutral white lacquered sheet steel casing. Unique to this device is the advanced control unit. The control optionally allows thermostats and air valves up to 4 zones independently of each other to control.

By using electronically controlled DC motors, the power consumption is greatly reduced so that the environment is spared and you consume considerably less electricity.

The fan of the MC-10 is located on the pressure side of the system. This ensures that the fan is always optimally cooled and the service life of the motor bearings is extended. Due to a well thought-out design, the heat exchanger compartment is extremely well insulated with 15 mm thick insulation, thus limiting heat losses.

The units are delivered almost ready to use. It suffices to connect the supply and return pipes of the hot water, the air ducts and the power lines on site.

The MC-10 air heater is supplied in DOWNFLOW (lower blowing) version, but can be installed in UPFLOW version (upper blowing).

2 Technical data

2.1 General technical data

The air heaters are CE labelled and comply with the Machinery Directive 89/392/EEC, the Low Voltage Directive 73/23/EEC, the EMC Directive 89/336/EEC. The fans used comply with the ErP directive 2009/125/EEC, requirement 2015.

2.2 MC-10 air heater

MC-10		
Blower	Type	D3G160
Power	Watt	170
Nominal rated output	kW	10
Nominal flow rate	m³/h	600
Air on temperature	ºC	20
Air off temperature	ºC	71,9
Water supply temperature	ºC	80
Water return temperature	ºC	73
Water flow rate	l/s	0,37
Dimensions	mm	768 x 300 x 550
Weight	kg	27
Electrical supply		230 V~, 1P+N , 50Hz

3 Operation of the control unit

3.1 General

The MC-10 is equipped with an advanced control unit with TFT touch screen that always informs the user about the operation of the device.

The installer and/or the user can adjust a number of parameters in the controller so that the devices can be perfectly adapted to the situation in which they are used.

In principle, the installer can choose between two different operating modes: the MC-10 air heater can be used as a “slave” or as a “master”.

If the MC-10 is used as a “slave”, the device does not actively participate in the system. Therefore, no room thermostat is connected to the controller.

If the MC-10 is used as a “master”, the device actively participates in the control. At least 1 thermostat is then connected to the controller. In addition, a number of other outputs can be used and controlled (such as the zone control).

The slave mode is very simple, but a number of possibilities of the device remain unused. The master mode offers additional possibilities (such as zone control), but this of course ensures that the installation is slightly more extensive.

In both cases, the fan speed is normally automatically adjusted according to the air temperature and the selected operating mode.

3.2 The control panel

3.2.1 Basic screen

By default, the following information is displayed on the screen:

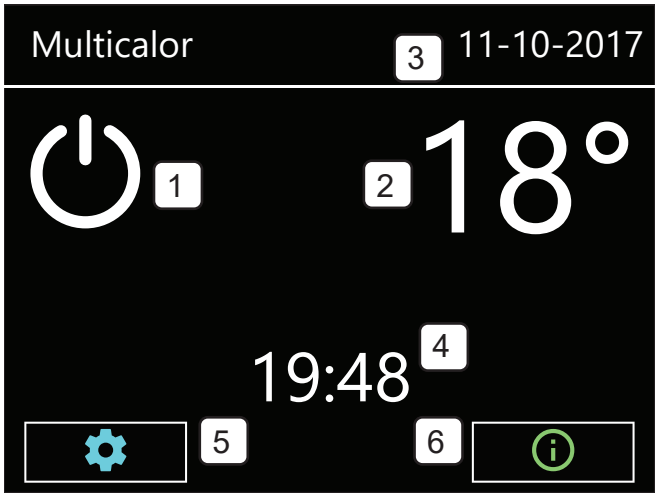

Legenda

Number	Meaning
1	Current Function Mode
2	Air temperature
3	Date
4	Time
5	Menu button settings
6	Menu button information

3.2.2 Changing settings

Pressing the settings icon ⚙ displays the first screen of the menu.

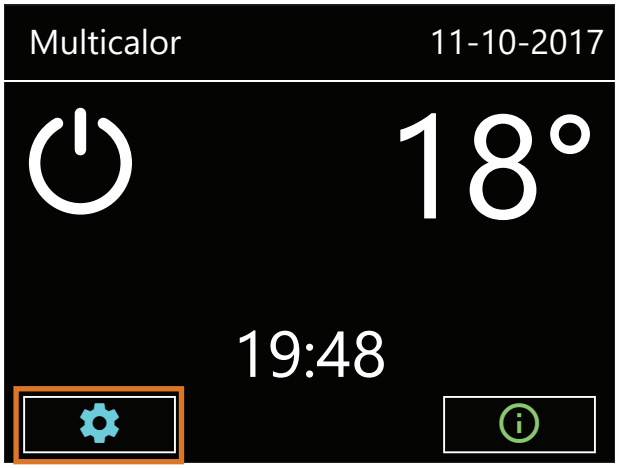

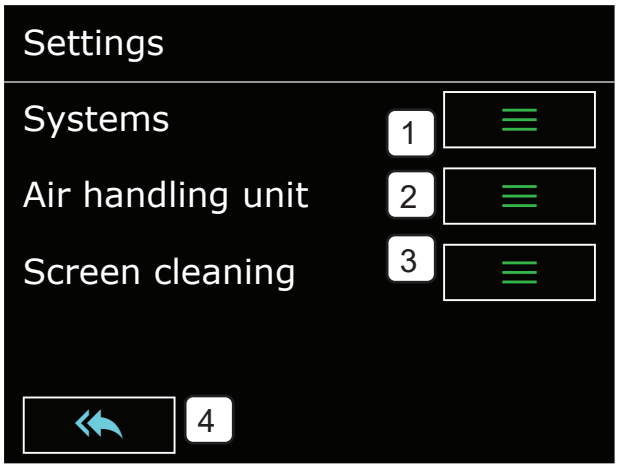

Legenda

Number	Meaning
1	System Settings
2	Settings regarding the operation of the MC-10
3	Screen cleaning
4	Back to the home screen

3.2.3 Changing air heater settings

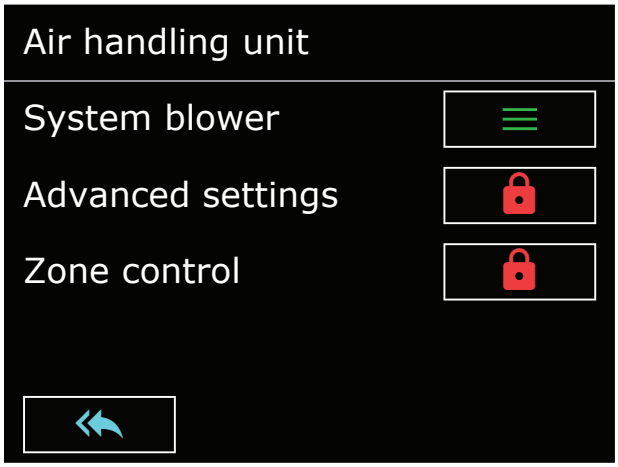

Under "Air handling unit" you can set the minimum, medium and maximum fan speed and temperature of the MC-10 air heater.

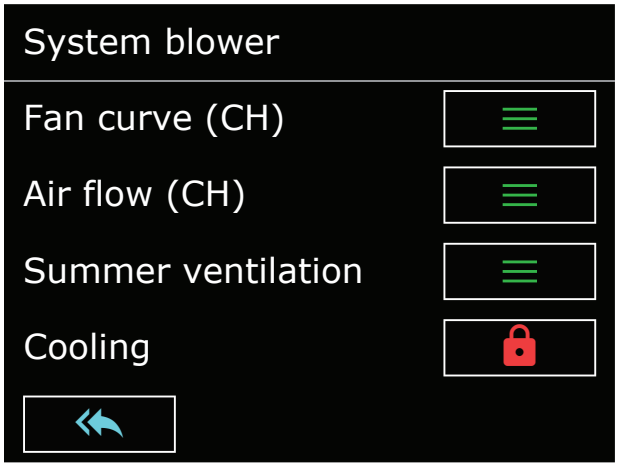

3.2.3.1 Low, average or high temperatures

On the MC-10, 3 air temperatures can be set: low, medium and high. To set these values, press the menu button settings, air heater, system fan and then the first option "fan curve" in the menu.

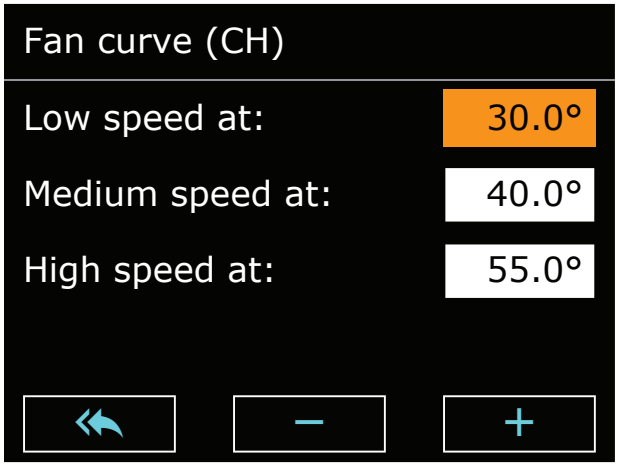

On the right side of the screen, you can select the low, medium or high speed options by pressing the value next to them.

The selected value is displayed in orange. Pressing the ⊟ or ⊞ buttons changes the set value.

Pressing ↩ automatically saves the changes and exits the menu screen.

3.2.3.2 Low, medium and high speed

On the MC-10, 3 airspeeds can be set for heating: low, medium or high value. To set these values, press the menu button settings, air heater, then system fan and then the "Air flow" option.

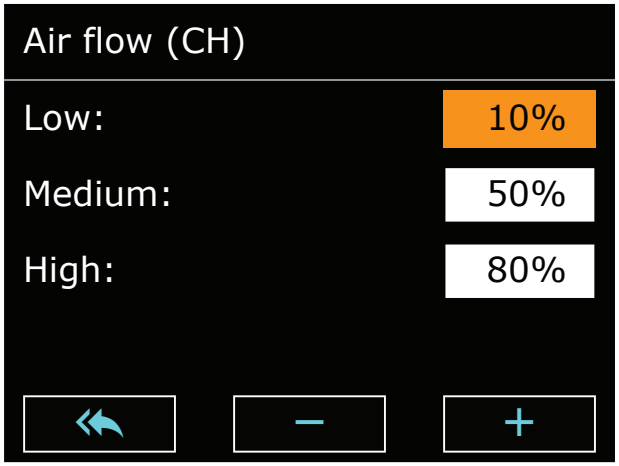

The selected value is displayed in orange. Pressing the ⊟ or ⊞ buttons changes the set value.

Pressing ↩ automatically saves the changes and exits the menu screen.

3.2.3.3 Relationship between the air temperature and air speed, fan curve

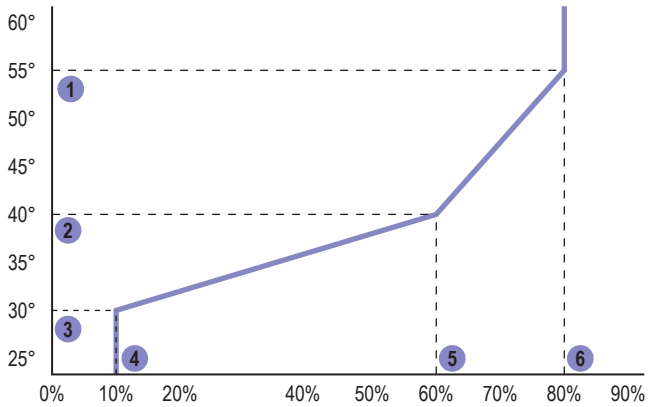

The relationship between the air temperature and air speed is displayed in the above graph. If the air temperature is lower than the "low value" (3) parameter, the blower is operational at the "low" (4) speed. If the air temperature is higher than the "high value" (1) parameter, the blower is operational at the "high" (6) speed. In-between these values, the speed of the blower is automatically adjusted based on the air temperature.

The "average value" (5) and "average" (2) parameters serve as an additional checking point to ensure you have more control over the air flow rate.

3.2.4 Change system settings

Under "system" you can set some basic settings.

3.2.4.1 Set language

The control can be set to different languages. To access this setting, press the system button in the settings menu and then press the third option.

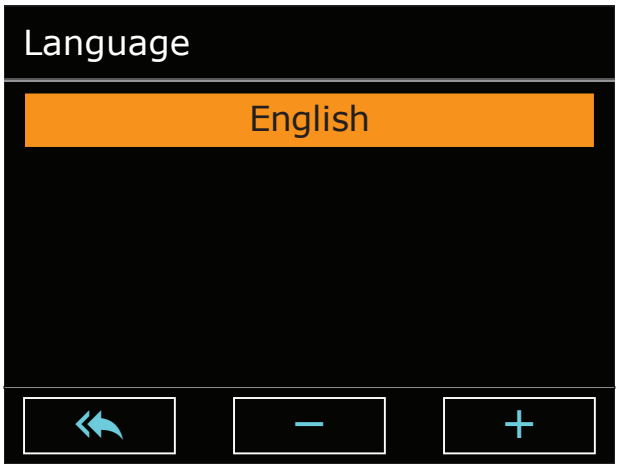

The selected value is displayed in orange. Pressing the ⊟ or ⊞ buttons changes the set value.

Pressing ↩ automatically saves the changes and exits the menu screen.

3.2.4.2 Setting the time and date

Analogously, you can adjust time and date mode.

3.2.4.3 Change screen rotation

Under "Settings-System-Display" you will find the possibility to rotate the screen 180º.

This is necessary if you change the unit to an upward blowing version.

Then change the value from 0 to 2 at screen rotation.

Pressing ↩ automatically saves the changes and exits the menu screen.

It is only after leaving the screen that this rotation is executed.

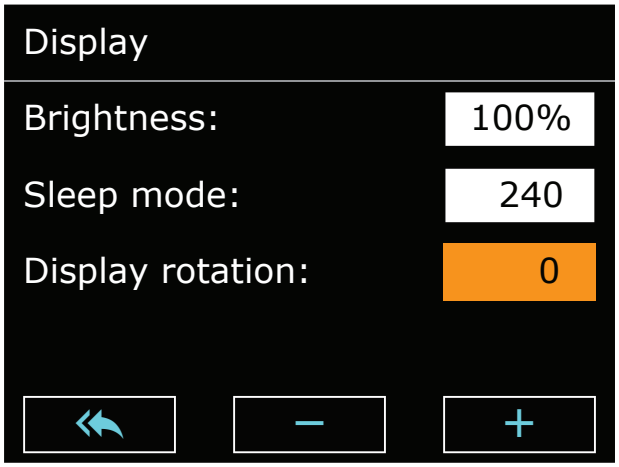

3.2.5 Cleaning the screen

Pressing the Screen Cleaning button temporarily turns off the touch screen for cleaning. Clean the screen with a microfiber cloth or a paper towel.

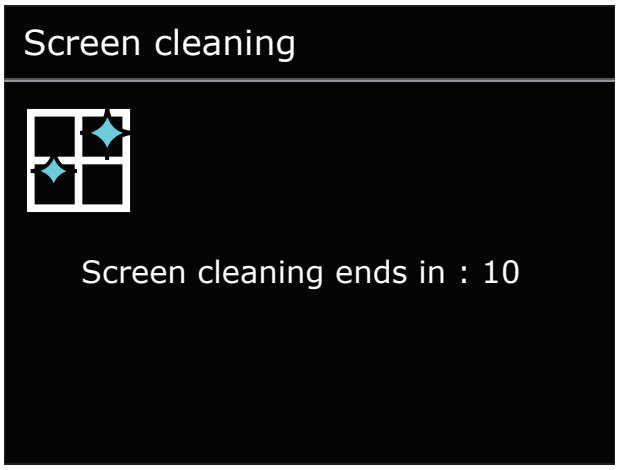

3.2.6 Installer menu

Certain parameters are in an installer's menu to prevent ill-considered changes. This installer menu is only accessible after entering a code.

Legenda

Code	User lever
123456	Power user
007007	Installer

The code for user level "technician" is only released after following a training course at Multicalor.

Under normal circumstances it is not necessary to make any changes to this menu.

3.2.7 Summer ventilation

If the unit is used as a master, it is possible to switch the unit into ventilation mode with an external contact, for example GR on the A3100.

The blower then runs at the speed set in the summer ventilation parameter "Settings-System blower-Summer ventilation".

3.2.8 Locking

If an error occurs that endangers the safe operation of the unit, the unit is locked. The cause of the lock is displayed on the screen.

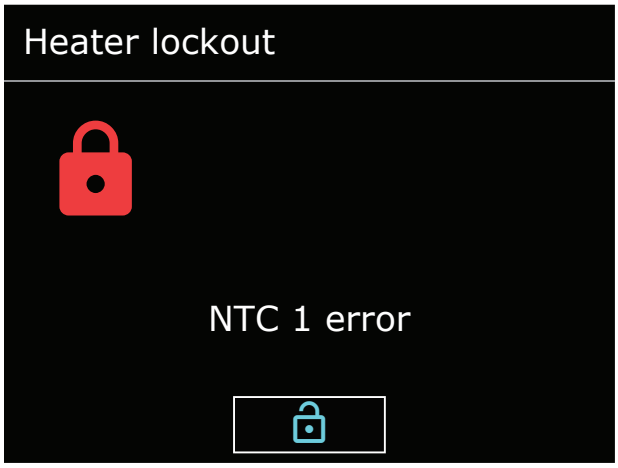

The lock can be released by pressing the release button. However, if the fault is not resolved, the unit will lock again.

You should then contact your installer or the manufacturer for a solution.

3..9 Information screens

By pressing the information button in the main menu you can view a number of information screens such as system version, NTC probes, blower, etc.

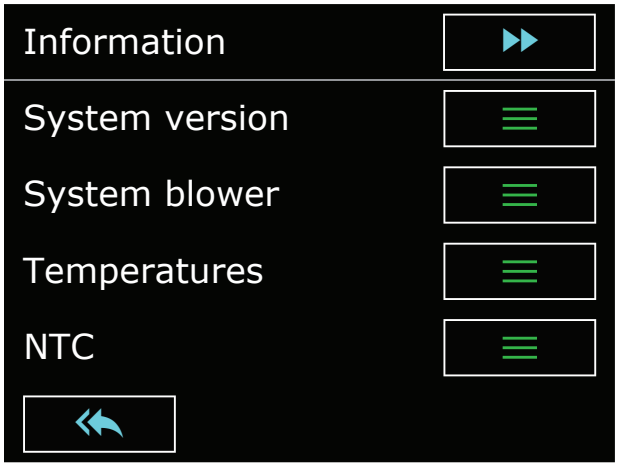

Important!

- Please note that the installation of the air heater may only be carried out by a qualified installer.
- In addition, the installation must be carried out in accordance with the latest edition of all local standards and the installation instructions of the respective appliance.
- Furthermore, make sure that the conditions of the local distribution network (electricity and hot water) correspond to the settings of the appliance before installation or commissioning.

4.1 General

4.1.1 Transport damage

Please check the air heater for transport damage upon delivery. If damage is found, please state this on the carrier's delivery note. Make sure that the driver confirms your findings. You will then warn your supplier in writing. Damage that has not been established on the waybill cannot be taken into account afterwards.

4.1.2 Packaging

The air heaters are packed in a box made of recycled cardboard. Do not throw away the packaging but offer it for further recycling.

4.1.3 Installation guidelines

Observe the following guidelines when determining the position of the air heater:

- Place the unit centrally in relation to the duct system;
- Place the unit on a flat and solid subfloor;
- On a damp floor, the unit must be placed in a raised position;
- Always install the unit in isolation from the building structure to avoid transmission of noise and vibrations.

Warning:

- The appliance must be level!
- The appliance must be installed in a frost-free environment! If impossible, protect the water circuit against frost damage.
- Ensure that no aggressive and/or flammable products (such as chlorine, bleach, petrol, etc.) are installed in the installation room.
- When using a free return, no open-circuit appliances may be present in the installation room!

4.1.4 Minimum clearance around the appliance

Observe the following minimum clearances when setting up the device:

- Keep 50 mm clearance around the unit;
- Keep a clearance of at least 50 mm around the hot water supply pipes and any combustible material.
- At least 700 mm of service space must be provided at the front of the appliance (ensure a comfortable standing height).

4.1.5 Transportation on site

Move the appliance on site using a trolley.

- The air heaters must under no circumstances be moved by tilting at the corners. The casing of the unit can be irreparably damaged by this. This damage is not covered by the warranty of the appliance.

4.2 Structure

To set up the system as a downflow version, proceed as follows.

4.2.1 Installation of the discharge plenum (optional)

- Place a vibration-damping material, e.g. a sturdy rubber mat of +/- 20 mm thickness, on the floor.
- Remove the bottom of the plenum if the departure channel is connected to the bottom. A cut out has been applied so that this is relatively easy to achieve.
- Of course, you must also make an opening in the vibration-damping mat if present!
- Then place the discharge plenum and any lateral discharge channels.
- Seal everything with neutral silicone.

4.2.2 Installing the filter cover handle

By placing the thumbs on the corners of the filter cover it is possible to tilt the filter cover open.

The handle is easy to screw into the provided holes.

4.2.3 Opening the heat exchanger housing

The heat exchanger connections are accessible after removing the access panel.

4.2.4 Connecting water pipes

After opening the housing, the water pipes can be connected. The diameter of the water pipes is 22 mm.

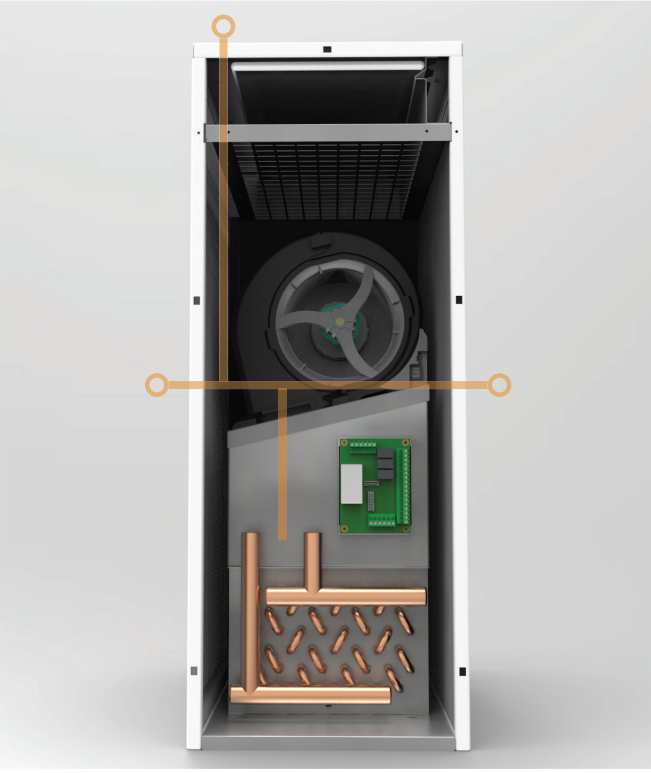

There are 3 possibe water pipe leadtroughs : left, right and upper left. Included blind grommets ensure an airtight seal of the heat exchanger compartment.

4.2.5 Removing the heat exchanger

It is possible to remove the heat exchanger from the steel cabinet. This can be interesting for several reasons : replacing a defective heat exchanger or blower, connecting the pipes during installation, ...

Remove the two hexagon socket head cap screws at the battery level (encircled) with an open-end spanner 8.

After this it is possible to extend the entire inner construction (heat exchanger + blower). A slight upward movement should be carried out.

4.3 Electrical installation

4.3.1 Supply voltage

The MC-10 operates on an electrical power supply of 230VAC~50Hz.

Attention:

- Do not switch on the power supply until all cables are correctly connected.

4.3.2 Connecting the MC-10 air heater

4.3.2.1 General (master and slave)

The connections of the air heater are made in the fan compartment. Remove the filter access panel and filter. Then remove the shield plate so that you can see the PCB.

If the unit is switched as “slave”, this is sufficient for connections. If the appliance is switched as a master, you must still connect at least one thermostat. You should also loop the control signal to the group pump or combination boiler.

4.3.2.2 Thermostats

If you wish to use the device as a master, you must connect at least 1 thermostat. The unit works optimally together with the electronic clock thermostat A3100. This thermostat is suitable for heating, cooling and ventilation and is specially designed for use with air heaters. Connect the thermostat according to the instructions on the schedule. Adjust the switching speed of the A3100 so that the thermostat switches 12 times per hour.

- Attention: the A3100 has a bridge between R and Rc at the factory. Do not remove this bridge!

You can connect a maximum of 4 thermostats to the control system. Each thermostat can then be connected to its own air flow. By means of an optionally available expansion PCB, 4 stop valves (equipped with servomotors) can be controlled so that a 4-zone control can easily be built. You must order an optional expansion PCB.

If you wish to use a different thermostat, only use models with potential-free contacts. You generate heat demand with contact WR and cooling demand with contact YR. Consult the diagram for more information.

Mount the room thermostat at about 1.6 m height, centrally in the room and easily accessible for normal air circulation in the room. Always mount the thermostat on an interior wall where it is not influenced by other heat sources such as air vents, electrical appliances, direct sunlight, etc. The installation near windows, doors, close (<1.20 m) to an external wall or under or close to a staircase is also not recommended. For more information on installation and programming, please refer to the operating instructions of the thermostat.

4.3.2.3 Installation "slave"

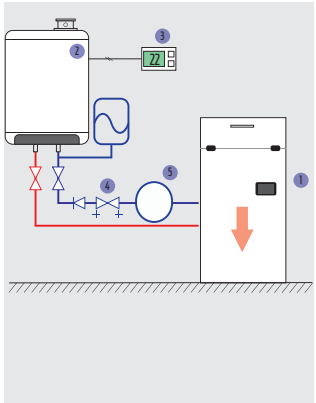

Legenda	
1	MC-10
2	Boiler
3	Room thermostat
4	Single way valve and adjustment valve
5	Small buffer tank min.40l

Notes to the scheme of principles

- Make sure that you connect the heat exchanger in counterflow. The hottest water should be connected to the connection farthest from the fan.
- Always consult the manual of the water boiler before installing it.
- Components such as boiler pump, dirt trap, air vent, etc. are not shown in our schematic diagrams. These components must of course be present, consult the boiler manufacturer if in doubt.

- For some boilers, it maybe necessary to add a small buffer tank. This allows a boiler more time at start up to stabilize before modulation and prevent short cycling.

4.3.2.3 Installation as "master" with group pump

This method of connection is often used when a common boiler serves several residential units. The room thermostat is connected to the MC-10, which releases a potential free contact (max. 8A) to switch on a group pump.

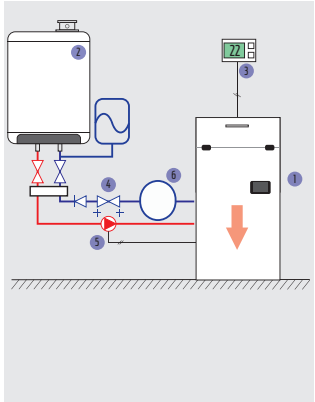

Legenda	
1	MC-10
2	Boiler
3	Room thermostat
4	Single way valve and adjustment valve
5	Group pump
6	Small buffer tank min.40l

Notes on the principle diagram

- The points raised in section 4.3.2.3 also apply here.

4.4 Installation of the duct system

4.4.1 Installation of pulse channels (discharge)

The air ducts must be connected to the hot air distribution box. For UPFLOW models, the hot air distribution box is placed on top of the unit. With a DOWNFLOW appliance, the hot air distribution box is placed BOTH the appliance.

Like the duct system, this air outlet plenum must be sufficiently insulated to limit pipe losses.

The ducts must have a sufficient cross-section for the displaced air volume. All air ducts, including the grille shoes, must of course be insulated.

4.4.2 Installation extraction ducts (suction)

You can choose to take air from the top or side of the device. When side return installation, a special side return air kit needs to be fitted.

When using the unit in standard downflow situation, the flanges on the top need to be folded upways to create a return frame for the ducts.

If you use an open return, there must be no appliances with an open combustion chamber in the boiler room. Otherwise, you must connect a return duct to the MC-10.

Attention:

- Never use the MC-10 without an air filter! This can damage the heat exchanger irreparably.

When using an open return, it is best to install the corresponding silencer.

5 Maintenace

5.1 Maintenance by the end user

5.1.1 Cleaning the air filter

The standard air filter is a synthetic air filter with a life span of 1 year. However the filter requires monthly cleaning, to be performed as set out below:

- Set the thermostat 5ºC lower than the environment temperature.
- You may wait until the apparatus has cooled down.
- Disconnect the mains.
- Remove the air filter and use a vacuum cleaner to clean it
- Put the filter back into the machine.
- Restore the mains.
- Set the room thermostat again to the required value.

Never remove the air filter from an MC-10 unit. The machine must always be fitted with a EU3 (or better) air filter. Heating or ventilating without a filter may pollute the heat exchanger to such an extent that the machine may incur irretrievable damage, which the warranty does not cover.

5.1.2 Cleaning the casing

The casing may be cleaned with a soft humid cloth. Do not use aggressive media such as bleaching water, solvents or petrol, as these products are likely to damage the paint.

5.1.3 Cleaning the display

The touch screen can be temporarily switched off for cleaning by pressing the clean screen button. Clean the screen using a microfibre cloth or with a paper tissue.

5.2 Maintenance by the installer

The unit is nearly free of maintenance. It is sufficient to replace the air filter and to check the unit for leakage and proper functioning.

- Set the thermostat 5ºC lower than the environment temperature;
- You may wait until the apparatus has cooled down;
- Disconnect the mains;
- Remove and replace the air filter;
- Check unit for functioning and check for leaks;
- Verify pressure in the supply lines;
- Switch mains power on;
- Set the room thermostat again to the required value

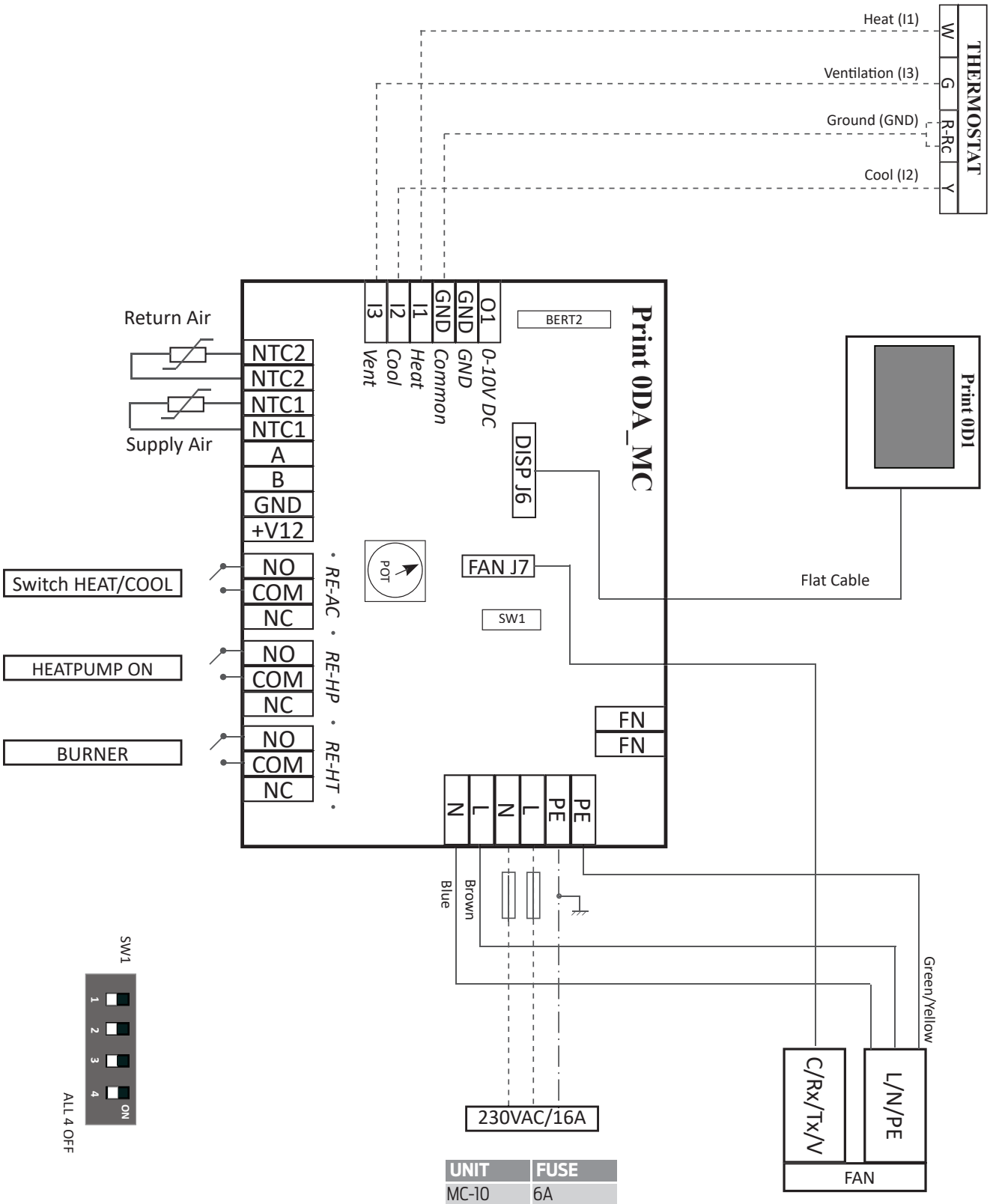

UNIT	FUSE
MC-10	6A
MC-14	6A
MC-20	10A
MC-30	10A
MC-40	16A

7 Warranty

7.1 General

Multicalor Industries NV guarantees the MC units against all manufacturing defects or material faults, subject to the terms and conditions described under 'Scope and duration of the warranty'. Moreover Multicalor Industries NV guarantees the machine will achieve the output indicated in normal conditions.

7.2 Scope and duration of the warranty

The warranty starts at the moment of purchase by the first user and entitles the beneficiary of the warranty, through the dealer or the service department of Multicalor Industries NV, to:

- One (1) year free exchange of faulty parts;
- Five (5) year free exchange of the heat exchanger, but exclusive of labour costs and travel expenses.

Replacement of parts does not change the initial warranty period, i.e. the warranty is not extended by the replacement of faulty parts.

7.3 Damage that is not covered by the warranty

All damage resulting from:

- Machine use which does not match normal household or light commercial use;
- Failure to meet the user instructions as summed up in the user manual;
- Insufficient or wrong maintenance;
- Irretrievable fouling up of the heat exchanger caused by heating, ventilating or cooling with a highly fouled up or absent dust filter;
- Modifications or adaptations to the machine not covered by prior written approval by Multicalor Industries NV;
- Repairs carried out with non-original parts or wrong equipment or materials;
- The heat exchanger when used in an atmosphere polluted with chlorine or other chemicals;
- Causes foreign to the machine, including (but not restricted to):

1. Damage incurred during transport, including dents, scratches, etc.;
2. Damage caused by disasters, including fire, lightning, flooding;
3. Damage linked to frost;
4. Damage caused by a departure from the normal power voltage, or water or pressure deviating widely from the nominal values suitable for the normal supply of the machine;
5. Damage caused by a non-conformity of the installation to the local standards applicable.

7.4 Not covered under warranty

- Parts subject to normal wear, including air filters, fuel filters and other parts that have to be replaced periodically;
- Machines the serial number of which has been removed or altered;
- Travel expenses and labour costs if the matching warranty period has expired;
- Result damage caused by the faulty machine;
- Any loss of productivity attributable to the faulty machine;
- Any loss of use caused by a fault to the machine;
- When the machine proves unsuitable for the purposes for which the purchaser bought the machine.

7.5 Repairs

During the warranty period the customer may call upon the services of the dealer who sold the machine or, in Belgium, to the "after-sales" department of Multicalor Industries NV.

7.6 Service-parts

If it is necessary to replace a part, we recommend that the matching article code of the part concerned be mentioned on the order, in addition to the type of air heater, the machine's serial number as well as the name of the part concerned. The machine type and serial number are mentioned on the registration plate placed in the machine.

8 Declaration of conformity

Multicalor Industries declares that the water-fired air heater MC-10 complies with the Machinery Directive 89/392/EEC, the Low Voltage Directive 73/23/EEC and the EMC Directive 89/336/EEC.

The fans used comply with the ErP directive 2009/125/EEC, requirement 2015.

For more information, please contact your installer:

Date of last change
4/11/2020
Manual MC-10
Modifications reserved

Multicalor Industries NV · Blarenberglaan 21 · B-2800 Mechelen (Belgium)
www.multicalor.be · Tel.: +32 15 29 03 03 · Fax: +32 15 29 03 20 · info@multicalor.be